28X/IST105/ (1/2)

REV. 0 - 31/03/2021

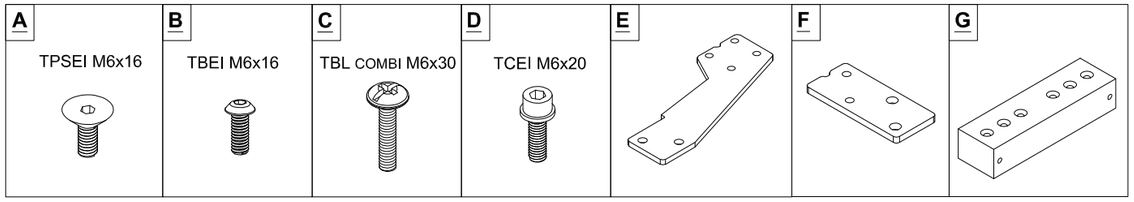

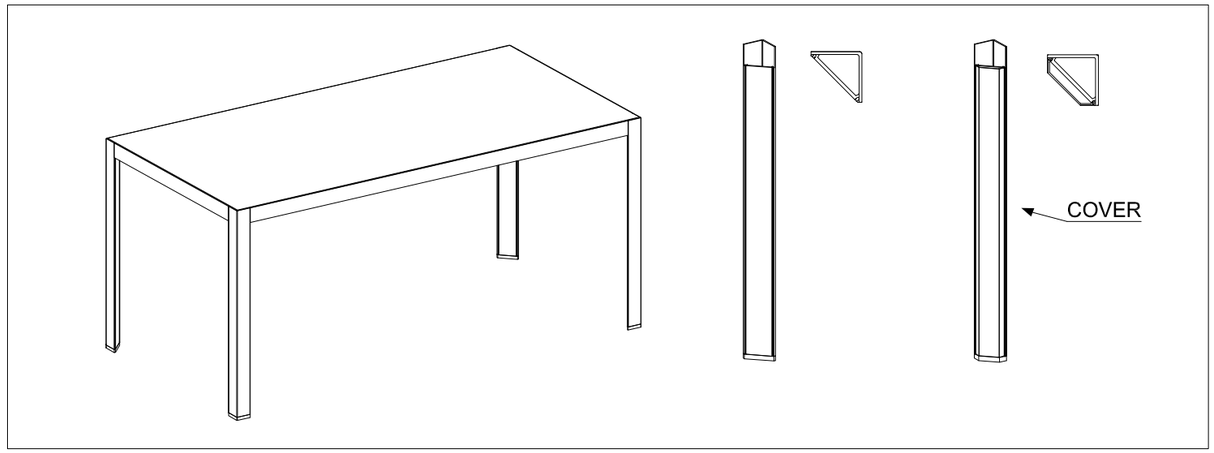

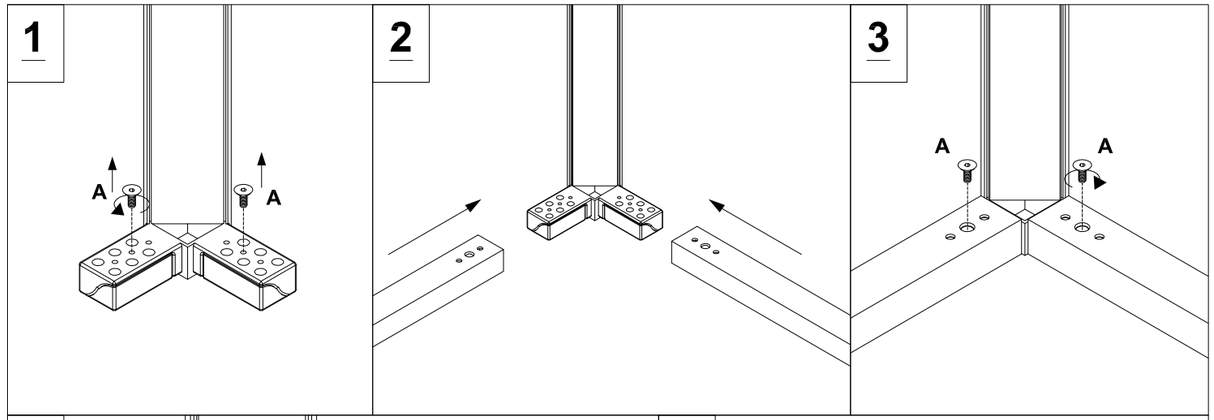

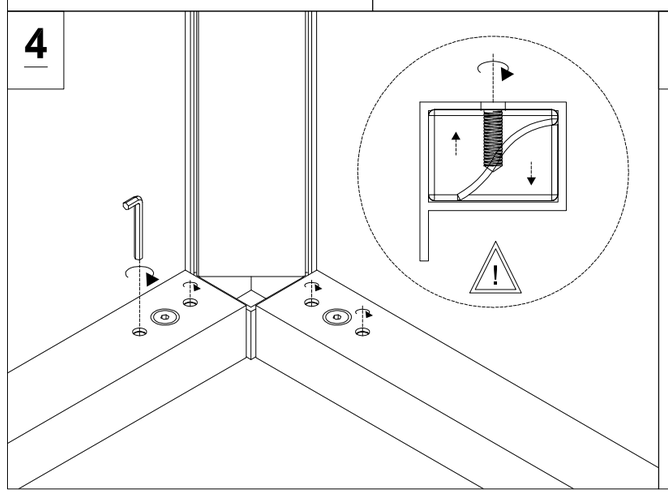

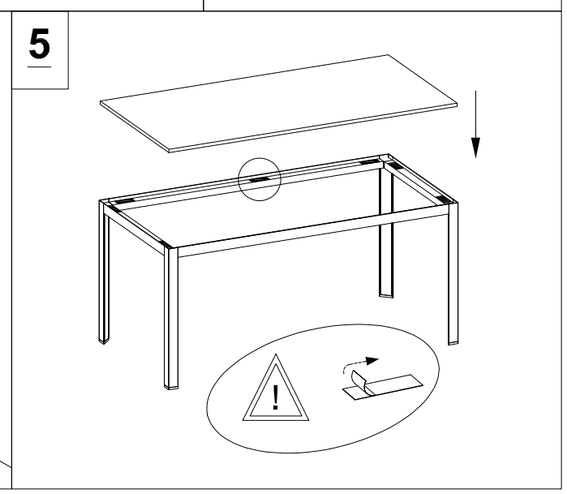

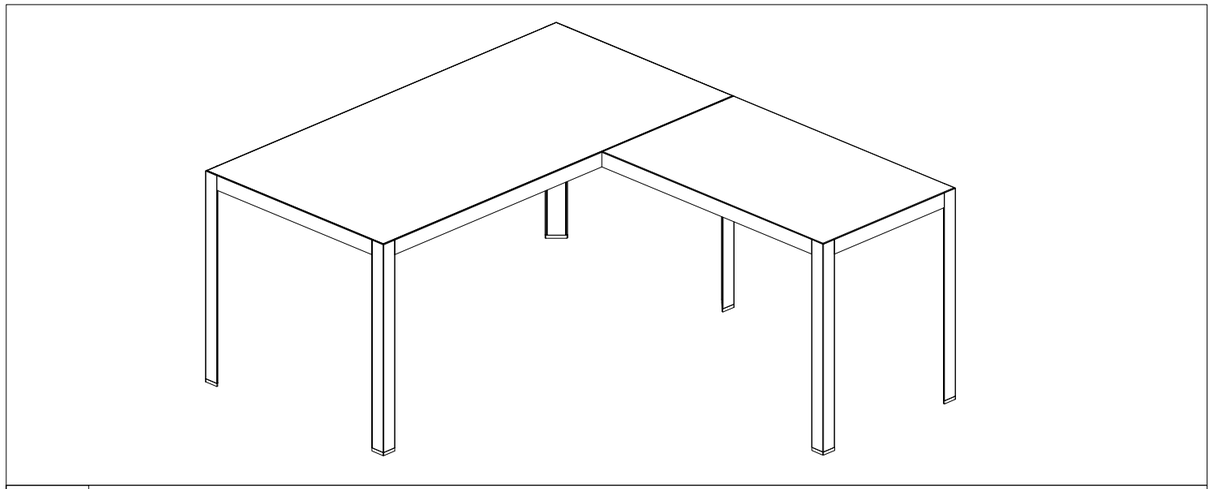

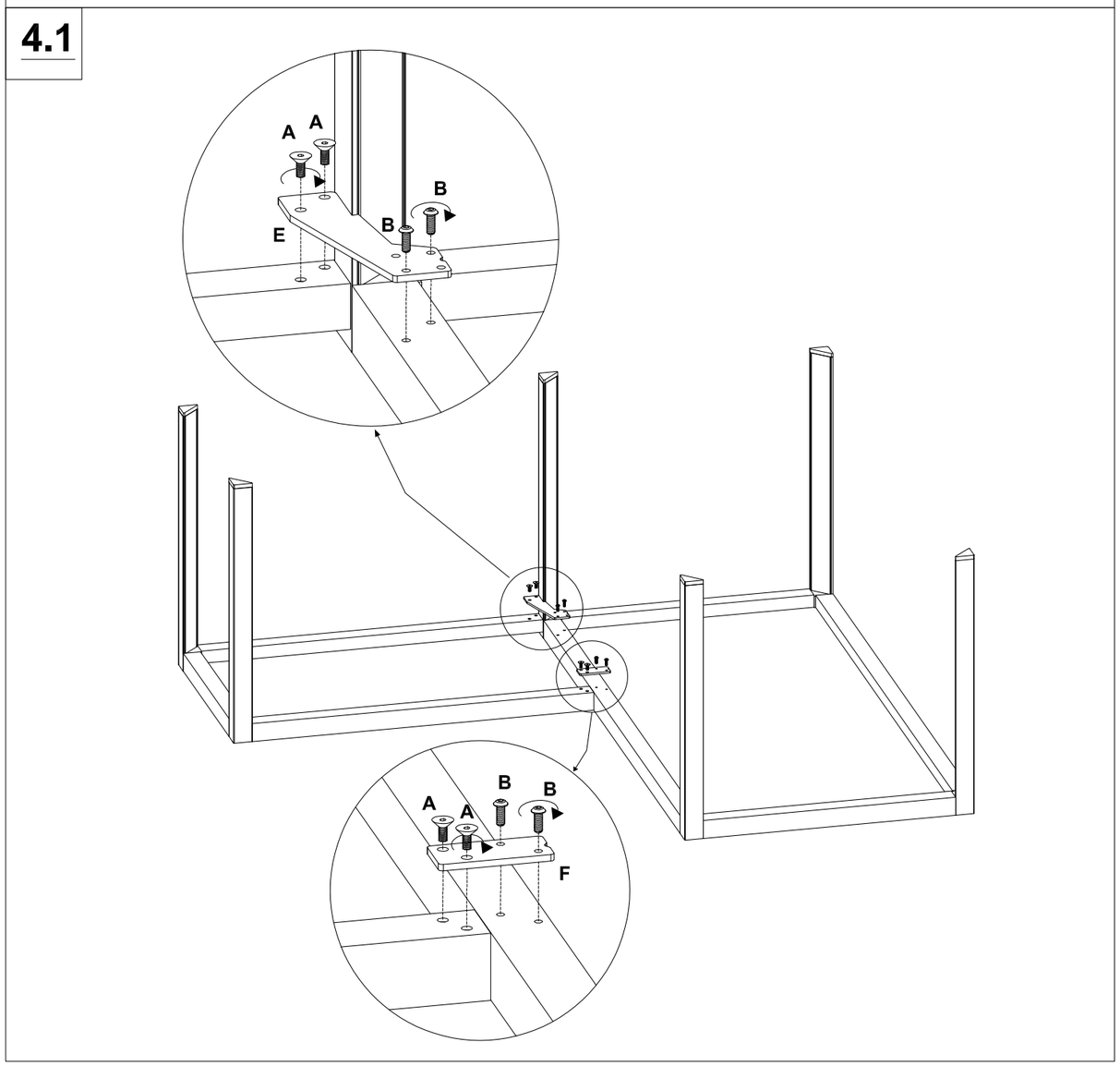

28X/IST105/ (2/2)

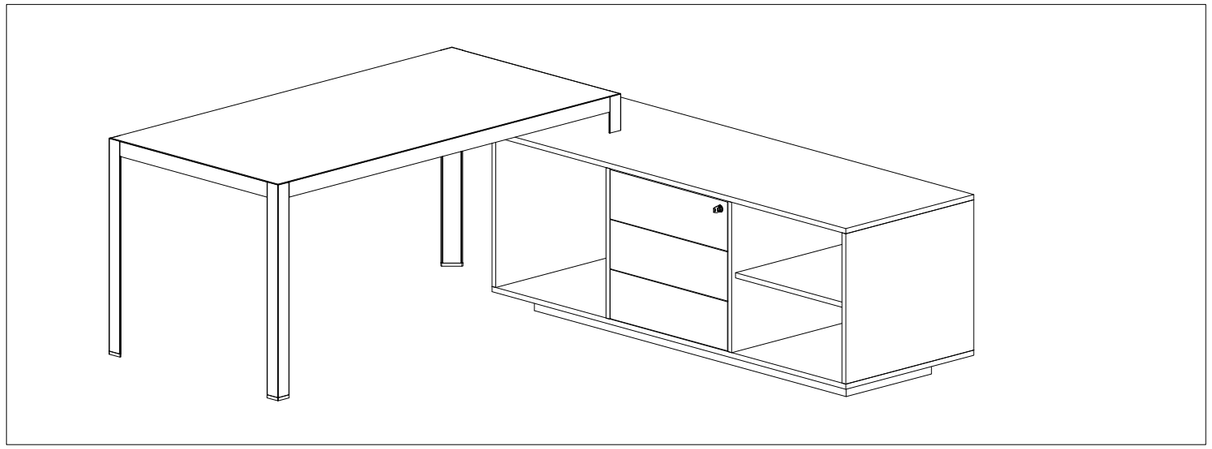

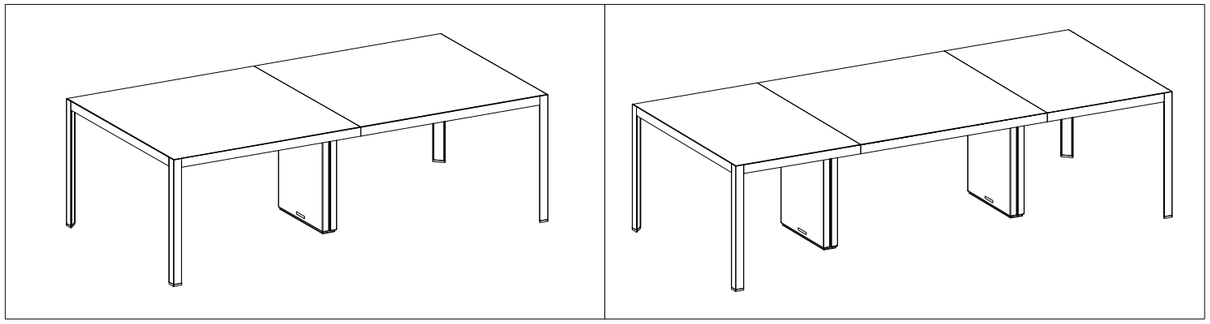

4.1

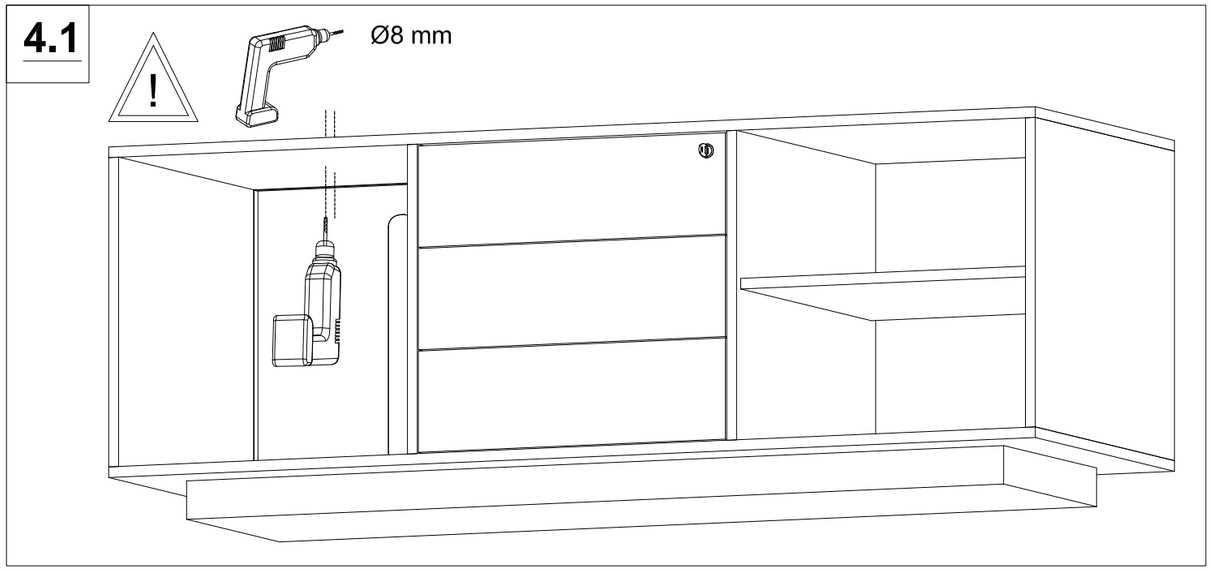

4.1

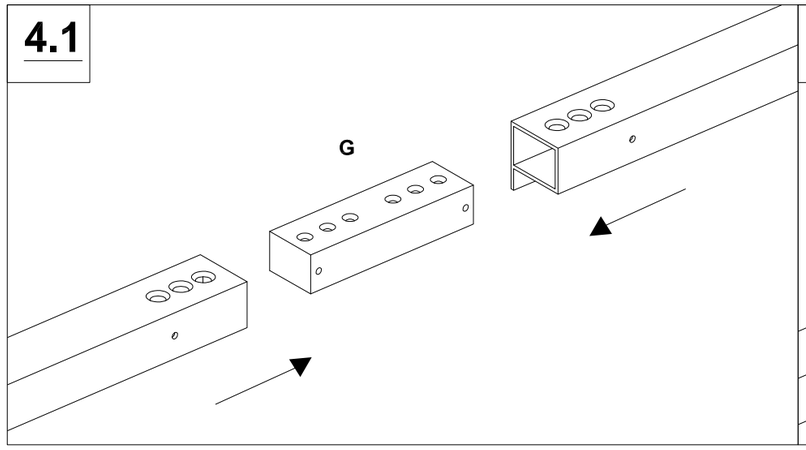

4.2

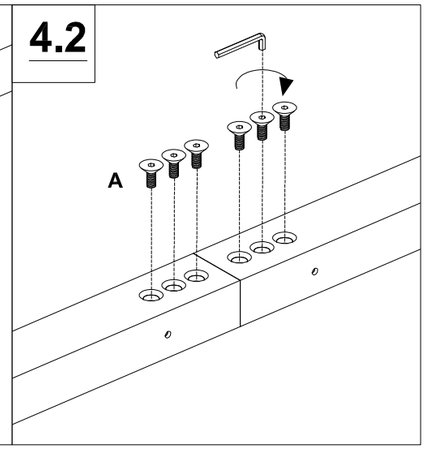

4.2

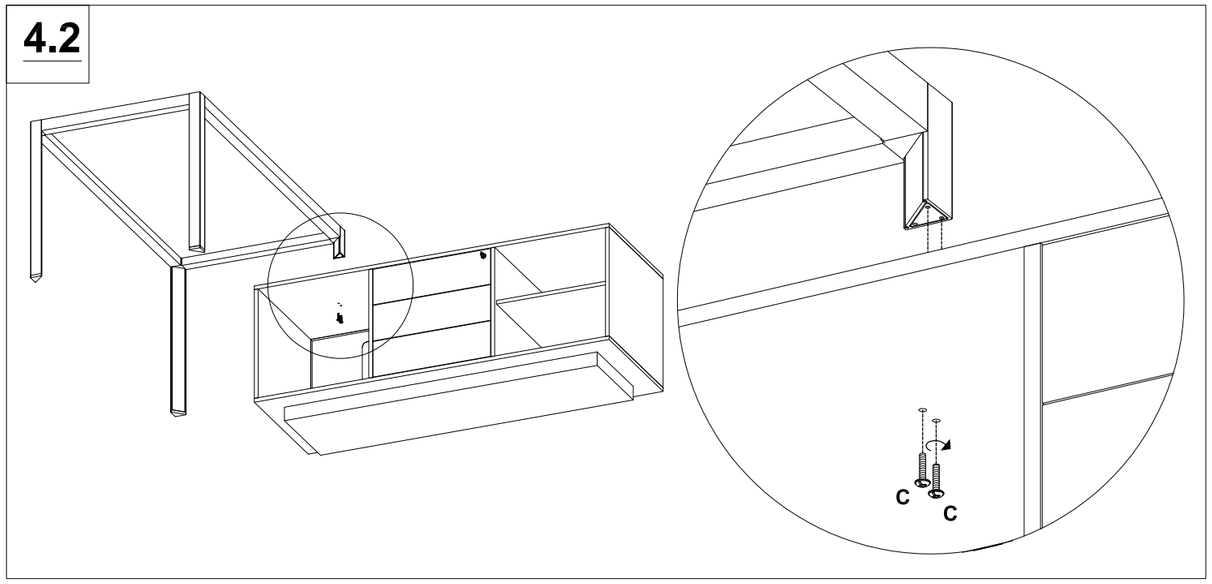

4.3

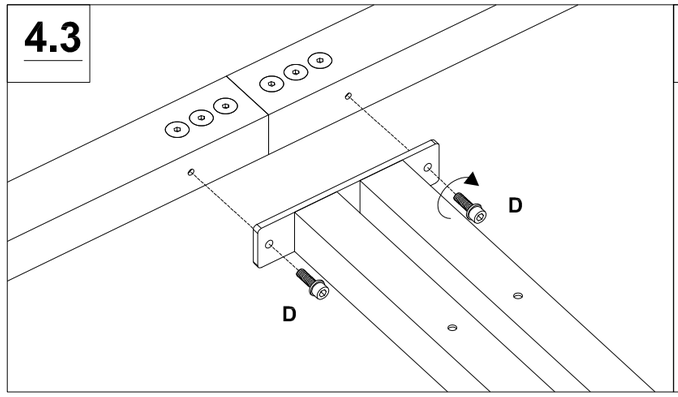

4.4

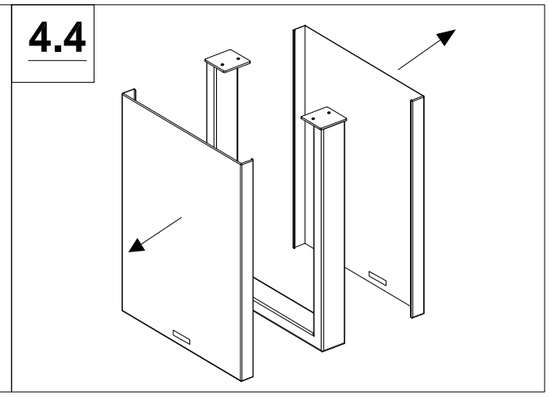
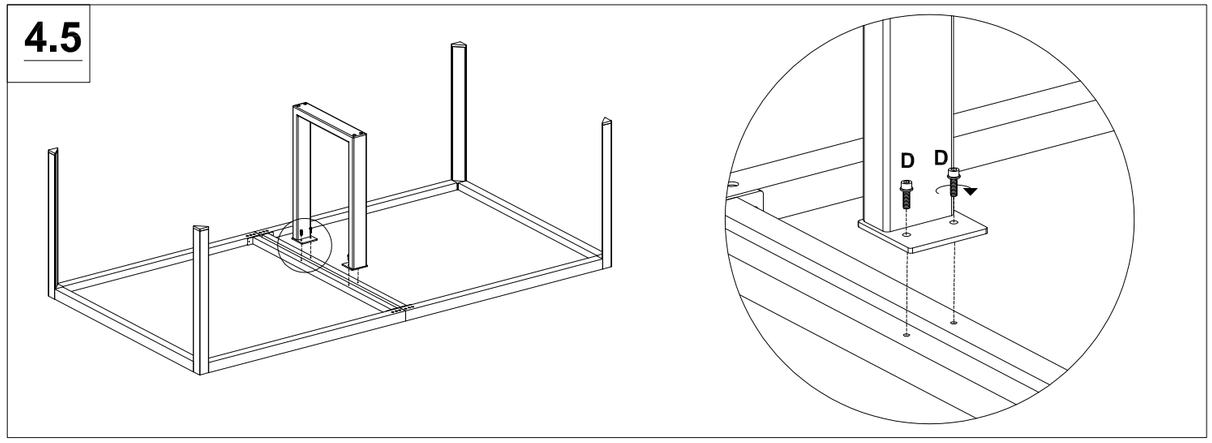
4.5